Agència
de Gestió d'Ajuts
Universitaris
i de Recerca

# Memòria justificativa de recerca de les convocatòries BCC, BE, BP, CTP-AIRE, DEBEQ, FI, INEFC, NANOS i PIV

**La memòria justificativa consta de les dues parts que venen a continuació:**
**1.- Dades bàsiques i resums**
**2.- Memòria del treball (informe científic)**

Tots els camps són obligatoris

## 1.- Dades bàsiques i resums

**Nom de la convocatòria**

**BE**

**Llegenda per a les convocatòries:**

| | |
|---|---|
| BCC | Convocatòria de beques per a joves membres de comunitats catalanes a l'exterior |
| BE | Beques per a estades per a la recerca fora de Catalunya |
| BP | Convocatòria d'ajuts postdoctorals dins del programa Beatriu de Pinós |
| CTP-AIRE | Ajuts per accions de cooperació en el marc de la comunitat de treball dels Pirineus.<br>Ajuts de mobilitat de personal investigador. |
| DEBEQ (Modalitat A3) | Beques de Cooperació Internacional i Desenvolupament |
| FI | Beques predoctorals per a la formació de personal investigador |
| INEFC | Beques predoctorals i de col·laboració, dins de l'àmbit de l'educació física i l'esport i les ciències aplicades a l'esport |
| NANOS | Beques de recerca per a la formació en el camp de les nanotecnologies |
| PIV | Beques de recerca per a professors i investigadors visitants a Catalunya |

**Títol del projecte:** ha de sintetitzar la temàtica científica del vostre document.
Model based fault diagnosis with application to an automotive engine

**Dades de l'investigador o beneficiari**


| Nom | Cognoms |
|---|---|
| Esteban Reinaldo | Gelso |

Correu electrònic
esteban.gelso@udg.edu

**Dades del centre d'origen**

Departament d'Enginyeria Elèctrica, Electrònica i Automàtica (EEEA) - Universitat de Girona

Agència
de Gestió d'Ajuts
Universitaris
i de Recerca

**Número d'expedient**
2006BE-2 00089

**Paraules clau:** cal que esmenteu cinc conceptes que defineixin el contingut de la vostra memòria.
Fault detection; Model-based; Uncertainty; Interval Analysis; Automotive engines.

**Data de presentació de la justificació**
**24/07/2008**

Nom i cognoms i signatura
del/de la investigador/a

Visttiplau del/de la responsable de la
sol·licitud

Generalitat de Catalunya
**Departament d'Innovació,**
**Universitats i Empresa**

**Resum del projecte:** cal adjuntar dos resums del document, l'un en anglès i l'altre en la llengua del document, on s'esmenti la durada de l'acció

**Resum en la llengua del projecte** (màxim 300 paraules)
Monitoring of the air intake system of an automotive engine is important to meet emission related legislative diagnosis requirements. In the work carried out during my stay at the University of Linköping between April to July 2007, the problem of fault detection in the air intake system was stated as a constraint satisfaction problem over continuous domains with a big number of variables and constraints. This problem was solved using Interval-based Consistency Techniques. Interval-based consistency techniques are shown to be particularly efficient for checking the consistency of the Analytical Redundancy Relations (ARRs), dealing with uncertain measurements and parameters, and using experimental data. All experiments were performed on a four-cylinder turbo-charged spark-ignited SAAB engine located in the research laboratory at Vehicular System Group - University of Linköping.

**Resum en anglès** (màxim 300 paraules)
Monitoring of the air intake system of an automotive engine is important to meet emission related legislative diagnosis requirements. In the work carried out during my stay at the University of Linköping between April to July 2007, the problem of fault detection in the air intake system was stated as a constraint satisfaction problem over continuous domains with a big number of variables and constraints. This problem was solved using Interval-based Consistency Techniques. Interval-based consistency techniques are shown to be particularly efficient for checking the consistency of the Analytical Redundancy Relations (ARRs), dealing with uncertain measurements and parameters, and using experimental data. All experiments were performed on a four-cylinder turbo-charged spark-ignited SAAB engine located in the research laboratory at Vehicular System Group - University of Linköping.

**Resum en anglès** (màxim 300 paraules) – continuació -.

**2.- Memòria del treball** (informe científic sense limitació de paraules). Pot incloure altres fitxers de qualsevol mena, no més grans de 10 MB cadascun d'ells.

## 1. INTRODUCTION

A defective operation of the instruments and equipments of the industrial plants increases its costs of operation, decreases the quality, etc. Even more serious could be the consequences, for instance in the people or environment, of an accident because of plant operation in faults presence.

The fault detection and diagnosis in complex industrial plants have become important since the last years with the increase of the automation of the processes. These tasks are assigned to the supervision computers to detect incipient faults. It can avoid, in some cases, big catastrophes (ships, airplanes, great structures) and in other cases, can reduce the maintenance costs. There are many research works in these areas and their results are now applied to continuous processes of production, where the availability of the machinery is critical from an economic point of view.

The problem of the fault detection and diagnosis can be approached from diverse perspectives, in particular, two scientific communities exist, that develop techniques of analytical redundancy, for the treatment of this problem. On the one hand it is the FDI community (Fault Detection and Isolation), that comes from the Control Engineering, and on the other hand, it is the DX community, which is made up of scientists coming from the area of Artificial Intelligence.

The approach of diagnosis based on consistency analysis of the Analytical Redundancy Relations (ARRs) is specially known from the FDI community [Blanke et al.,2003; Krysander and Nyberg, 2002; Staroswiecki and Comtet-Varga, 2001]. This approach consists basically on the fault signature matrix analysis, in which, additional information can be included to improve the fault isolation task [Dustegör et al., 2006; Puig et al., 2005]. This information, for instance, could be the signs of the fault sensitivities (with respect to each residual) [Calderón et al., 2006; Mosterman and Biswas, 1999] and the time at which the fault is detected.

At the area of Artificial Intelligence (well-known as community DX), one of the approaches developed for consistency based diagnosis is Possible Conflicts technique [Pulido and Alonso González, 2004], which identifies offline the subsystems that will be able to generate a conflict.

During years two communities, FDI and DX, have followed independent ways. Nevertheless, in the last years there has been an approach between the two communities with the objective to add the advantages that have the diverse techniques. The first effort in this sense took place in a French group called IMALAIA [Cordier et al., 2000a, Cordier et al., 2000b], later continued by the Bridge Group of the European excellence network MONET (MONET 1, 1997-2000, Esprit 22672; MONET 2, 2002-2005, IST-33540). An important work has been made trying to unify the terminology in order to improve the communication between the two communities.

The model-based detection and diagnosis methods are based on a set of suppositions, one of them is that mathematical model represents exactly the system dynamics. But, an exact and complete mathematical description of the process is never available. In the same way, as the complexity of a dynamic system increases, the system and its disturbances modelling task becomes more difficult. In general, it is possible to talk about uncertain models, when there is uncertain knowledge about system structure, parameters and disturbances.

In order to handle the problems due to the uncertainty, some detection and diagnosis approaches use bounding approaches. Some of them consider the models uncertainty by means of intervals. When interval uncertainties are considered, consistency methods which combine interval methods and constraint satisfaction techniques can be used to solve different problems such as parameter and state estimation problems. Constraint satisfaction techniques implement local reasoning on constraints to remove inconsistent values from variable domains. In practice, the set of inconsistent values is computed by means of interval reasoning.

Automotive engines is an important application for model-based diagnosis not only because of environmentally based legislative regulations, but also because of repairability, availability, and vehicle protection [Nyberg, 2002]. Different model-based approaches have been studied in several works as in [Gertler et al., 1995; Nyberg and Nielsen, 1998; Nyberg et al., 2001; Nyberg, 2002; Kimmich et al., 2005]. One important part of the diagnosis requirements for automotive engines is the air path. Possible faults include sensor faults, actuator faults and leakages. These types of faults typically lead to degraded emission control, and also possible damage to engine components.

## 2. FAULT DETECTION

Among the techniques developed by the FDI research community, there are classical methods, such as state observers, parity equations and parameter estimation [Blanke et al., 2003; Chen and Patton, 1998; Gertler, 1998; Patton et al., 2000]. One of the methods to detect faults consists in comparing the behaviour of an actual system and a model of the system. This principle is called analytical redundancy.

An analytical redundancy relation (ARR) is an algebraic constraint deduced from the system model which contains only measured variables. An ARR is used to check the consistency of the observations with respect to the system model. Therefore, a fault is detected when the analytical output of the model and the measured output of the system are different, i.e. the residual of the ARR is not equal to zero.

The main problem is that the measured output $y(k)$ and the computed output $\hat{y}(k)$ are seldom the same because the model is, by definition, inaccurate, i.e. it is an approximate representation of the

system. This is the consequence of the uncertainties of the system and the procedure of systems modelling.

The better model used to represent the dynamic behaviour of the system, the better will be the chance of improving the reliability and performance in detection and diagnosis of faults. However, modelling errors and disturbances in complex engineering systems are unavoidable and, hence there is a need to develop robust fault diagnosis algorithms. The goal of robustness is to minimize the false and missing alarm rates due to the effects that modelling uncertainty and unknown disturbances will have on the residuals. This can be achieved in several ways, e.g. by statistical data processing, averaging, or by finding and using the most effective threshold. One way to find effective thresholds is using intervals to bound the uncertainty of parameters and measurements. In this way adaptive thresholds (envelopes) could be obtained.

Some interval methods have been proposed in the context of fault detection and diagnosis [Armengol et al., 2000; Ploix and Follot, 2001; Puig et al., 2006]. In this work, the uncertainties associated with the system itself and with the measurements are taken into account, also by using intervals, and the fault detection problem is shown like a constraint satisfaction problem [Shary, 2002]. The resolution of this problem is performed using consistency methods [Collavizza et al., 1999; Benhamou et al., 1999] which combine interval methods and constraint satisfaction techniques. Constraint satisfaction techniques implement local reasoning on constraints to remove inconsistent values from variable domains. In practice, the set of inconsistent values is computed by means of interval reasoning. In this work, the solution of the fault detection CSP is performed by using the solver RealPaver [Granvillers and Benhamou, 2006].

## 2.1 Diagnostic observer

When dynamics is present and when a model's estimates of states are improved by feedback from measured signals, it is called an observer. An observer used for diagnosis is called diagnostic observer. Taking into account the uncertainty by means of intervals, as defined in [Puig et al., 2006], a non-linear interval observer equation with a Luenberger-like structure for a system in the state-space representation can be written as:

$$\hat{x}(k+1) = g(x(k), u(k), \theta) + K(y(k) - \hat{y}(k)),$$
$$\hat{y}(k) = h(x(k), u(k), \theta),$$

where $\hat{x} \in \Re^{nx}$ and $\hat{y} \in \Re^{ny}$ are estimated state and output vectors of dimension $nx$ and $ny$, respectively, $u \in \Re^{nu}$ and $y \in \Re^{ny}$ are measured input and output vectors of dimension $nu$ and $ny$. $\theta$ is the vector of uncertain parameters of dimension $np$ with their values bounded $\theta \in [\underline{\theta}, \overline{\theta}]$,

and $K$ is the gain of the observer. The choice of K can be done, for example, by pole placement. The observer functions like a low-pass filter and thus the pole placement is a compromise between fast fault response and sensitivity to disturbances and noise [Nyberg and Nielsen, 1998].

The estimated outputs are used to check the consistency of the observations with respect to the system model. Therefore a fault is detected when the measured value is either larger or smaller than the predicted value or in other words, when the output of the model is not consistent with the measured output. This assertion is expressed through the logical statement,

$$(\forall y(k) \in Y(k))\,(\forall \hat{y}(k) \in \hat{Y}(k))\; r(k) \neq 0,$$

where $r(k) = y(k) - \hat{y}(k)$ is a vector of residuals.

A problem finding the CSP solution is the continuous increment with time in the computational effort. As it is applied in the following section, an alternative to overcome this problem is the use of a sliding time window. The time interval from the initial time point to the current one is called time window $w$.

## 3. APPLICATION TO AN AUTOMOTIVE ENGINE

A schematic picture of the air-intake system is shown in Fig. 1. Ambient air enters the system and an air-mass flow sensor measures the air-mass flow rate $W_a$. Next, the air passes the compressor side of the turbo-charger, the intercooler and then the throttle. The flow $W_{th}$ is dependent on the intercooler and manifold pressures, $p_{ic}$ and $p_{im}$, the temperature $T_{ic}$, and the throttle angle $\alpha$. Finally the air enters the cylinder and this flow, $W_{cyl}$ is dependent on $p_{im}$ and $p_{em}$, the temperature $T_{im}$, the engine speed $N$ and the air-fuel ratio $\lambda$.

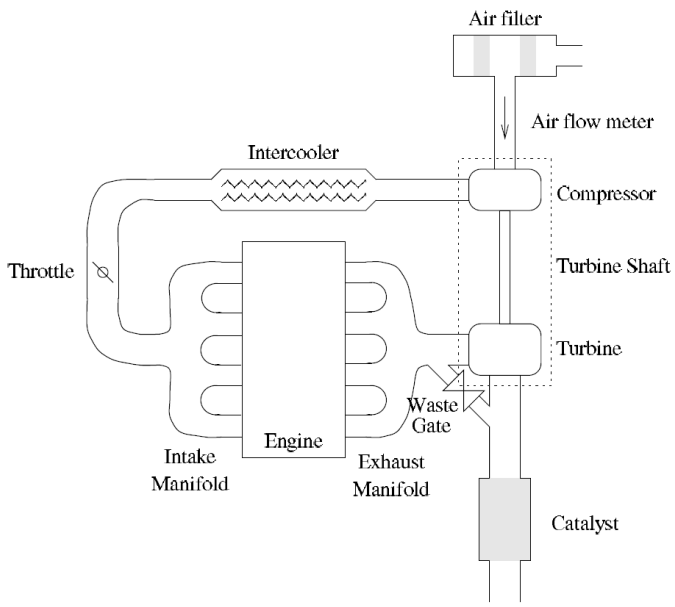


Fig. 1. Schematic figure of the turbo-charged engine.

The faults in the air-intake system can be, for instance, boost leakage, manifold leakage, pressure sensor bias, pressure sensor gain-fault, etc, as described in [Nyberg, 2002].

### 3.1 Model equations

The model used is a part of the Mean Value Engine Model explained in [Andersson, 2005]. This model describes the average behaviour of the engine over one to several thousands of engine cycles, and is a component based model in which each component is described in terms of equations, constants, parameters, states, inputs and outputs. This model was implemented during the research stay in Linköping in the software for modelling and simulation EcosimPro [EA International, 2008].

The equations describing the fault free air intake model can be written as

$$\frac{\mathrm{d}p_{im}}{\mathrm{d}t} = \frac{R_a T_{im}}{V_{im}}(W_{th} - W_{cyl}) + \frac{m_{im} R_a}{V_{im}} \frac{\mathrm{d}T_{im}}{\mathrm{d}t}$$

$$W_{th} = \frac{p_{ic}}{\sqrt{R_a T_{ic}}} \Psi(\Pi) A_{eff}(\alpha)$$

$$W_{cyl} = p_{im} C_1 \frac{1}{1 + \frac{1}{\lambda(\frac{A}{F})_s}} \frac{r_c - (\frac{p_{em}}{p_{im}})^{\frac{1}{\gamma_a}}}{r_c - 1} V_d \frac{N}{R_{im} T_{im}}$$

where,

$$\Pi = \frac{p_{im}}{p_{ic}}$$

$$\Psi^*(\Pi) = \sqrt{\frac{2\gamma}{\gamma - 1}(\Pi^{\frac{2}{\gamma}} - \Pi^{\frac{\gamma+1}{\gamma}})}$$

$$\Psi(\Pi) = \begin{cases} \sqrt{\gamma \left(\frac{2}{\gamma+1}\right)^{\frac{\gamma+1}{\gamma-1}}} & 0 < \Pi \leq \left(\frac{2}{\gamma+1}\right)^{\frac{\gamma}{\gamma+1}} \\ \Psi^*(\Pi) & \Pi < \left(\frac{2}{\gamma+1}\right)^{\frac{\gamma}{\gamma+1}} \leq \Pi_{lin} \\ \frac{\Psi^*(\Pi_{lin})}{\Pi_{lin} - 1}(\Pi - 1) & \Pi_{lin} < \Pi \leq 1 \end{cases}$$

Thus, from the previous model in discrete-time and including a non-linear interval observer, it is obtained:

$$\hat{p}_{im}(k+1) = \hat{p}_{im}(k) + T_s \frac{R_a T_{im}(k)}{V_{im}}(\hat{W}_{th}(k) - \hat{W}_{cyl}(k)) + K(p_{im}(k) - \hat{p}_{im}(k))$$

where the set of sensors considered are: pressures $p_{im}$, $p_{ic}$ and $p_{em}$, temperatures $T_{im}$ and $T_{ic}$, engine speed $N$ and throttle plate angle $\alpha$.

The uncertain parameters selected are two engine specific parameters, and those are the gain parameter $C_1$, which describes the engine pumping capabilities, and the ratio of specific heats $\gamma$. They have been bounded using the criterion that in the fault free case, there should be no false alarm. The variable $\lambda$ (the air-fuel ratio) has been considered as an interval, instead of the measured value, because of the accuracy of the sensor and for a sake of simplicity.

3.2 Experimental results

All experiments were performed on a four-cylinder turbo-charged spark-ignited SAAB engine located in the research laboratory at Vehicular Systems Group, Linköping University. The engine is mounted in a test bench together with a Schenck dynamometer.

In this report, by way of illustration, one faulty scenario is presented which corresponds to a gain-fault in the sensor of pressure $p_{ic}$. The fault detection results are obtained by using Weak-3B consistency technique and a window length equal to 30 samples (0.3s). The computation time required and the sample time have the same order of magnitude.

When no solution is found to the CSP, a fault is detected. Otherwise, when the observed behaviour and the model are not proven to be inconsistent, means there is not a fault or it could not be detected. In this way, the proposed approach prioritizes to avoid false alarms to missed alarms.

In Fig. 2, obtained results in the case of no fault and a 10% gain-fault in the pressure sensor of $p_{ic}$ are shown. A "1"' indicates there is a fault and a "0" means there is not a fault or it could not be detected. As shown in this figure, there is no false alarm in absence of fault. The fault in the sensor begins at sample 600 and is detected at sample 604.

Fig. 3 shows the interval measurement (solid line) and the estimated manifold pressure (dashed line) in the fault free situation.

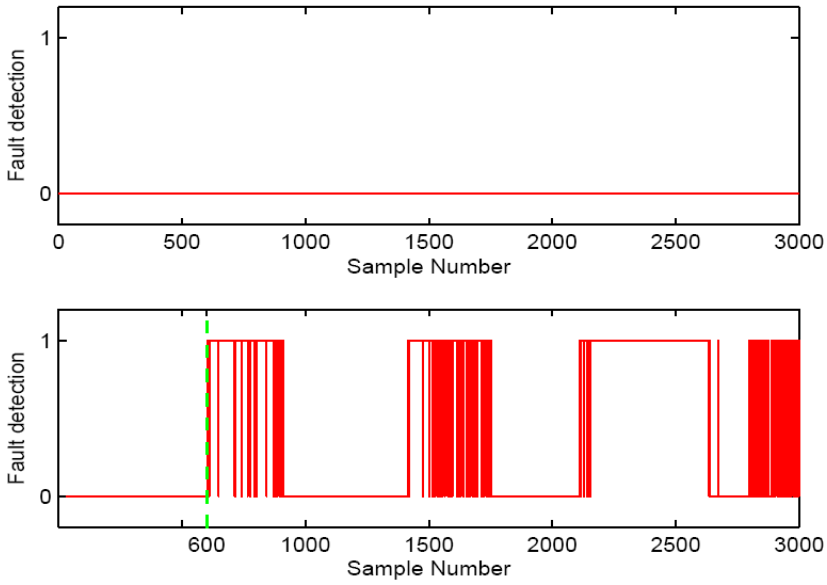


Fig 2. Fault detection. Top: no fault. Bottom: gain-fault in the sensor of pressure $p_{ic}$ beginning at sample 600. The fault is detected from sample 604.

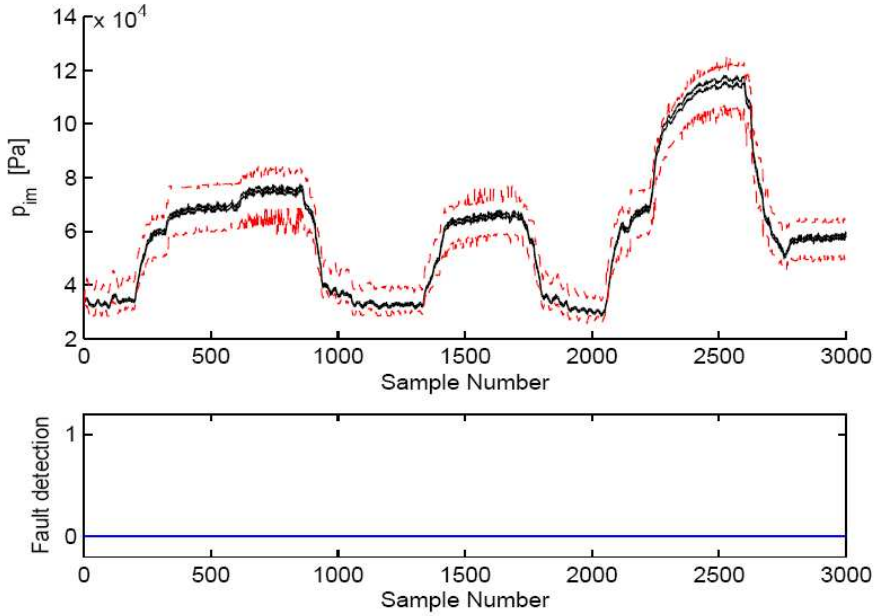


Fig. 3. Scenario without faults. The upper plot shows measured and estimated manifold pressure.

3.3 Diagnosis: signs of the symptoms

When it is possible to utilize detailed models for the faults, this information can be used together with the signs in the residuals, to prune the candidate space when performing the fault diagnosis task, as proposed in [Calderón et al., 2007].

This approach could be applied to perform the diagnosis in the studied scenario. In order to do this, it is needed to:

- Include in the fault signature matrix, the influence of the faults in the residuals, and

- Obtain the sign of the symptom. This could be obtained by observing the behaviour of the estimated output with respect to the measurement. For instance, the sign would be +1 if the estimation is greater than the interval measurement, or if the estimation is smaller than the interval measurement, the sign would be -1.

In the scenario considered, when a fault is detected, the algorithm estimates the manifold pressure at the end of each sliding window and the consistent region of this variable can be seen in Fig. 4. As it is expected, the interval measurement (solid line) does not intersect with the estimate (dashed line), and in this case, the estimates are always smaller than the measurements.

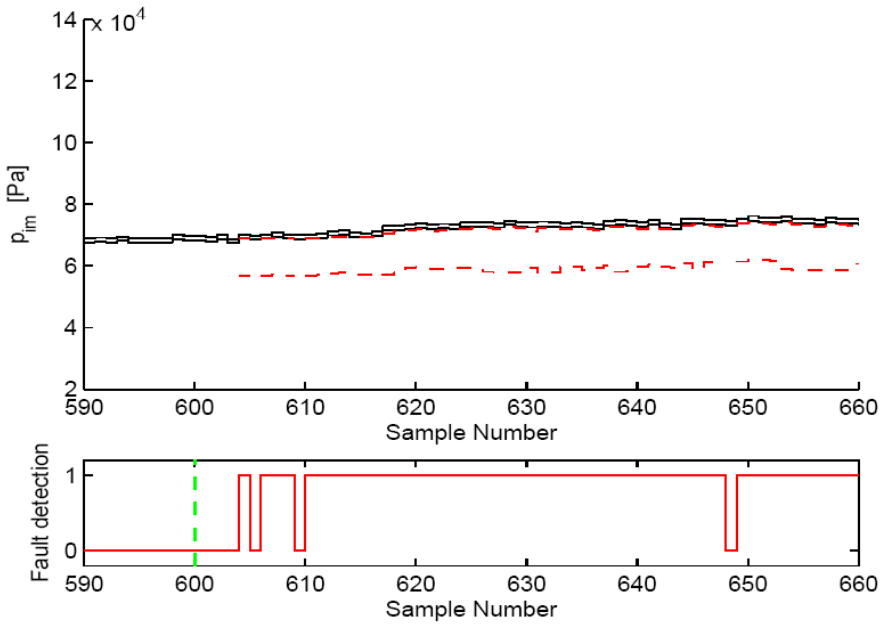


Fig. 4. Scenario with a gain-fault in the sensor of pressure $p_{ic}$ . Starts at sample 600, detected at 604.

## 4. CONCLUSIONS

When interval uncertainties are considered, consistency methods can be used to solve fault detection problems, as automotive engines applications. In this paper through the obtained results, consistency techniques are shown to be particularly efficient to check the consistency of the Analytical Redundancy Relations (ARRs) and diagnostic observers, dealing with uncertain measurements and parameters. The methodology has been tested in a real system, and good results have been obtained.

Regarding the objectives proposed in the work plan, it could be said they were achieved. Just one consideration has to be taken into account, due to the complexity of the model of the system, the initial fault detection tool (SQualTrack) was replaced by more powerful tools, the interval-based consistency techniques.

From this work, the article titled "Robust Fault Detection Using Consistency Techniques with Application to an Automotive Engine" [Gelso et al., 2008] has been accepted for oral presentation in the 17th IFAC World Congress (IFAC WC 2008), and was presented in Seoul, Korea, on July 8th, 2008. Results of this work are being extended, in order to submit a more complete article to a journal.

Finally, I would like to use this opportunity to thank the Agència de Gestió d'Ajuts Universitaris i de Recerca (AGAUR) for giving me the opportunity to perform a 4 months stay doing research in Sweden. Also I would like to thank the staff of the Division of Vehicular Systems in the Linköping University and especially Prof. Erik Frisk, and Sandra Castillo and Joaquim Armengol from the University of Girona,

REFERENCES

P. Andersson. Air Charge Estimation in Turbocharged Spark Ignition Engines. PhD thesis, Linköpings Universitet, December 2005.

J. Armengol, J. Vehí, L. Travé-Massuyès, and M. Á. Sainz. Interval model-based fault detection using multiple sliding time windows. In 4th IFAC Symposium on Fault Detection, Supervision and Safety for Technical Processes SAFEPROCESS 2000. Budapest, Hungary, pages 168–173, 2000.

F. Benhamou, F. Goualard, L. Granvilliers, and J. F. Puget. Revising hull and box consistency. In Proceedings of the International Conference on Logic Programming, pages 230–244, Las Cruces, NM, 1999.

M. Blanke, M. Kinnaert, J. Lunze, and M. Staroswiecki. Diagnosis and Fault-Tolerant Control. Springer, 2003.

G. Calderón-Espinoza, J. Armengol, J. Vehí and E. R. Gelso. Dynamic diagnosis based on interval analytical redundancy relations and signs of the symptoms. AI Communications, 20(1):39-47, 2007.

J. Chen and R.J. Patton. Robust model-based fault diagnosis for dynamic systems. Kluwer, 1998.

H. Collavizza, F. Delobel, and M. Rueher. Comparing partial consistencies. Reliable Computing, 5:213–228, 1999.

M. Cordier, P. Dague, M. Dumas, F. Levy, J. Montmain, M. Staroswiecki, and L. Travé-Massuyès. AI and automatic control approaches of model-based diagnosis: links and underlying hypotheses. In 4th IFAC Symposium on Fault Detection, Supervision and Safety for Technical Processes SAFEPROCESS, pages 274–279, 2000a.

M. Cordier, P. Dague, M. Dumas, F. Levy, J. Montmain, M. Staroswiecki, and L. Travé-Massuyès. A comparative analysis of ai and control theory approaches to model-based diagnosis. In 14th European Conference on Artificial Intelligence ECAI, pages 136–140, 2000b.

D. Dustegör, E. Frisk, V. Coquempot, M. Krysander, and M. Staroswiecki. Structural Analysis of Fault Isolability in the DAMADICS benchmark. Control Engineering Practice, 14(6):597–608, 2006.

EA International, (2008) EcosimPro User Manual, Version 4.4.

E.R. Gelso, E. Frisk, and J. Armengol. Robust Fault Detection Using Consistency Techniques with Application to an Automotive Engine. In Proc. 17th IFAC World Congress, Seoul, Korea, 2008.

J. Gertler, M. Costin, X. Fang, R. Hira, Z. Kowalalczuk, M. Kunwer, and R. Monajemy. Model based diagnosis for automotive engines - algorithm development and testing on a production vehicle. IEEE Trans. on Control Systems Technology, 3(1):61–69, 1995.

J. Gertler. Fault Detection and Diagnosis in Engineering Systems. Marcel Dekker, 1998.

L. Granvilliers and F. Benhamou. Algorithm 852: Realpaver: an interval solver using constraint satisfaction techniques. ACM Trans. Math. Softw., 32(1):138–156, 2006.

F. Kimmich, A. Schwarte, and R. Isermann. Fault detection for modern diesel engines using signal- and process model-based methods. Control Engineering Practice, 13(2):189–203, February 2005.

M. Krysander and M. Nyberg. Structural analysis utilizing MSS sets with application to a paper plant. In Proc. 13th Int.Workshop Principles Diagnosis DX, Semmering, Austria, 2002, pp. 51–57.

P. J. Mosterman and G. Biswas. Diagnosis of continuous valued systems in transient operating regions. IEEE Trans. on Systems, Man and Cybernetics, 29(6):554–565, November 1999.

M. Nyberg and L. Nielsen. Model based diagnosis for the air intake system of the SI-engine. SAE Transactions, Journal of Commercial Vehicles, 106:9–20, 1998.

M. Nyberg, T. Stutte, and V. Wilhelmi. Model based diagnosis of the air path of an automotive diesel engine. IFACWorkshop: Advances in Automotive Control, pages 629–634, Karlsruhe, Germany, 2001.

M. Nyberg. Model-based diagnosis of an automotive engine using several types of fault models. IEEE Transaction on Control Systems Technology, 10(5):679–689, 2002

R. J. Patton, P. M. Frank, and R. N. Clark. Issues of fault diagnosis for dynamic systems. Springer, 2000.

S. Ploix and C. Follot. Fault diagnosis reasoning for set-membership approaches and application. In IEEE International Symposium on Intelligent Control, 2001.

V. Puig, F. Schmid, J. Quevedo, and B. Pulido. A new fault diagnosis algorithm that improves the integration of fault detection and isolation. In 44th IEEE Conference on Decision and Control, and the European Control Conference, 2005.

V. Puig, A. Stancu, T. Escobet, F. Nejjari, J. Quevedo, and R. J. Patton. Passive robust fault detection using interval observers: Application to the Damadics benchmark problem. Control Engineering Practice, 14(6):621–633, 2006.

B. Pulido and C. Alonso González. Possible conflicts: A compilation technique for consistency-based diagnosis. IEEE Transactions on Systems, Man, and Cybernetics, Part B, 34(5):2192–2206, 2004.

S.P. Shary. A new technique in systems analysis under interval uncertainty and ambiguity. Reliable Computing, 8:321–418, 2002.

M. Staroswiecki and G. Comtet-Varga. Analytical redundancy relations for fault detection and isolation in algebraic dynamic systems. Automatica, 37(5):687–699, 2001.